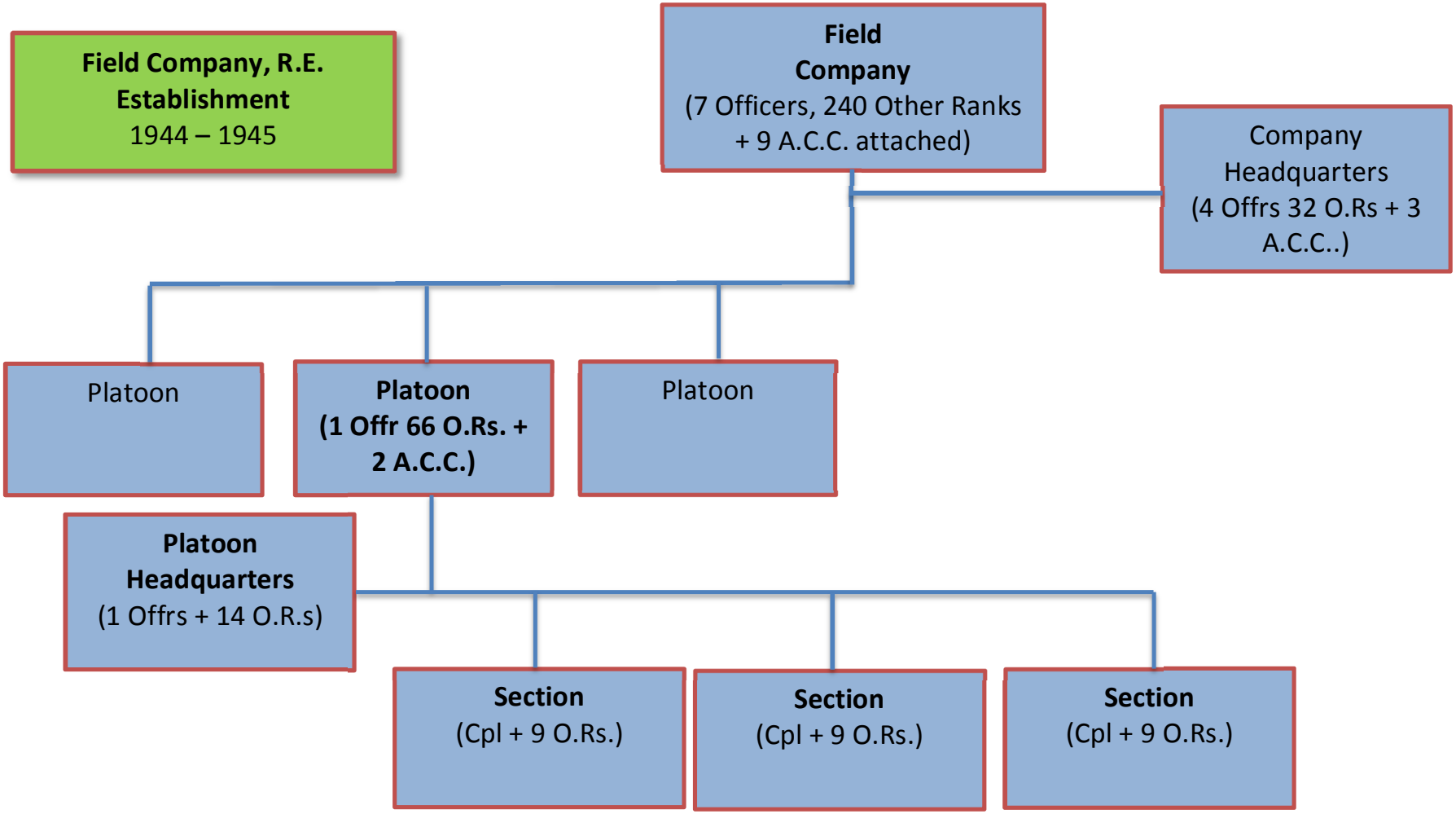
Field Company, R.E. Establishment
1944 – 1945
Field Company
(7 Officers, 240 Other Ranks + 9 A.C.C. attached)
Company Headquarters
(4 Offrs 32 O.Rs + 3 A.C.C..)
Platoon
Platoon
(1 Offr 66 O.Rs. + 2 A.C.C.)
Platoon
Platoon Headquarters
(1 Offrs + 14 O.R.s)
Section
(Cpl + 9 O.Rs.)
Section
(Cpl + 9 O.Rs.)
Section
(Cpl + 9 O.Rs.)