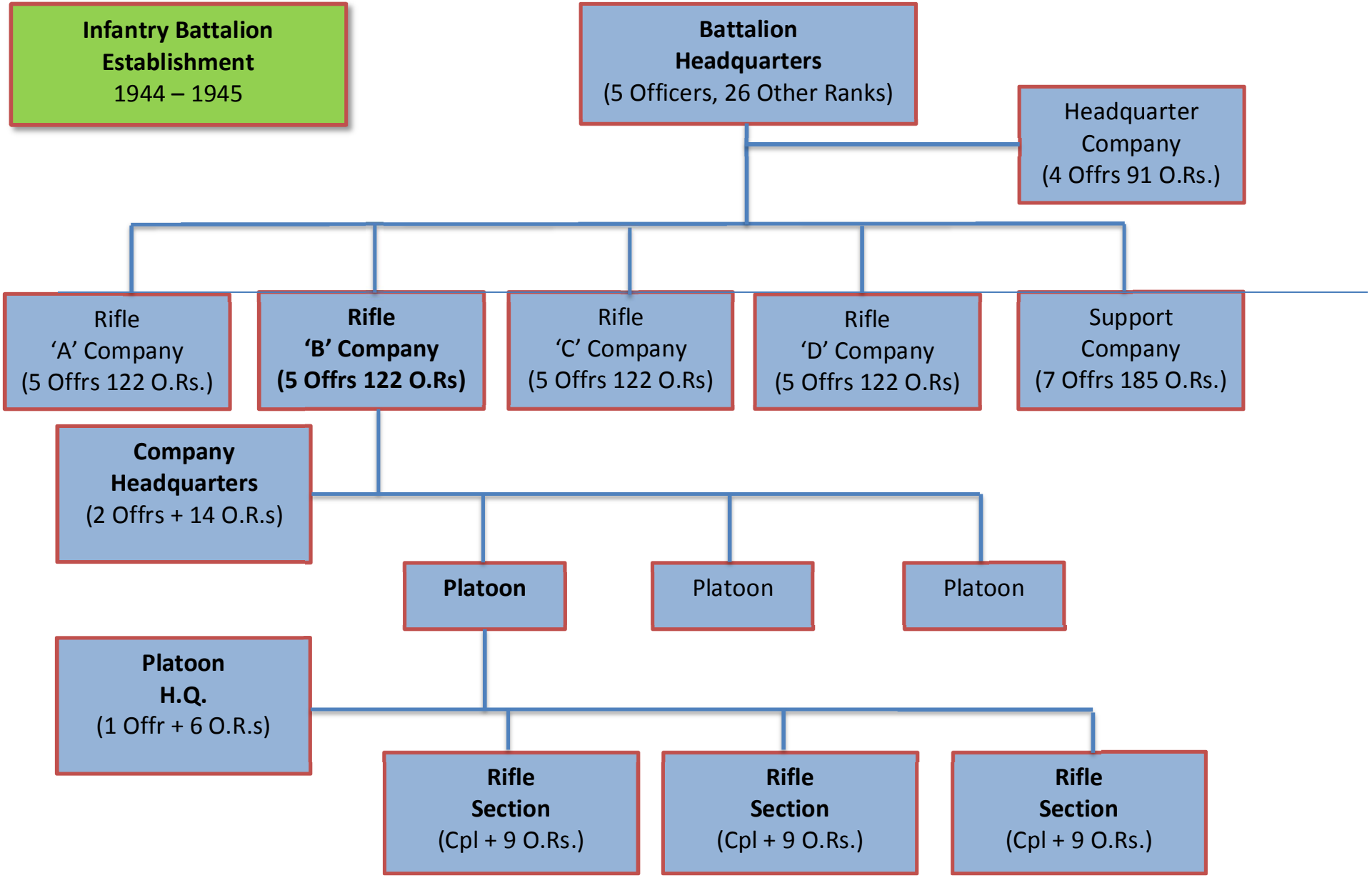
Infantry Battalion Establishment 1944 – 1945
Battalion Headquarters (5 Officers, 26 Other Ranks)
Headquarter Company (4 Offrs 91 O.Rs.)
Rifle 'A' Company (5 Offrs 122 O.Rs.)
Rifle 'B' Company (5 Offrs 122 O.Rs)
Rifle 'C' Company (5 Offrs 122 O.Rs)
Rifle 'D' Company (5 Offrs 122 O.Rs)
Support Company (7 Offrs 185 O.Rs.)
Company Headquarters (2 Offrs + 14 O.R.s)
Platoon
Platoon
Platoon
Platoon H.Q. (1 Offr + 6 O.R.s)
Rifle Section (Cpl + 9 O.Rs.)
Rifle Section (Cpl + 9 O.Rs.)
Rifle Section (Cpl + 9 O.Rs.)

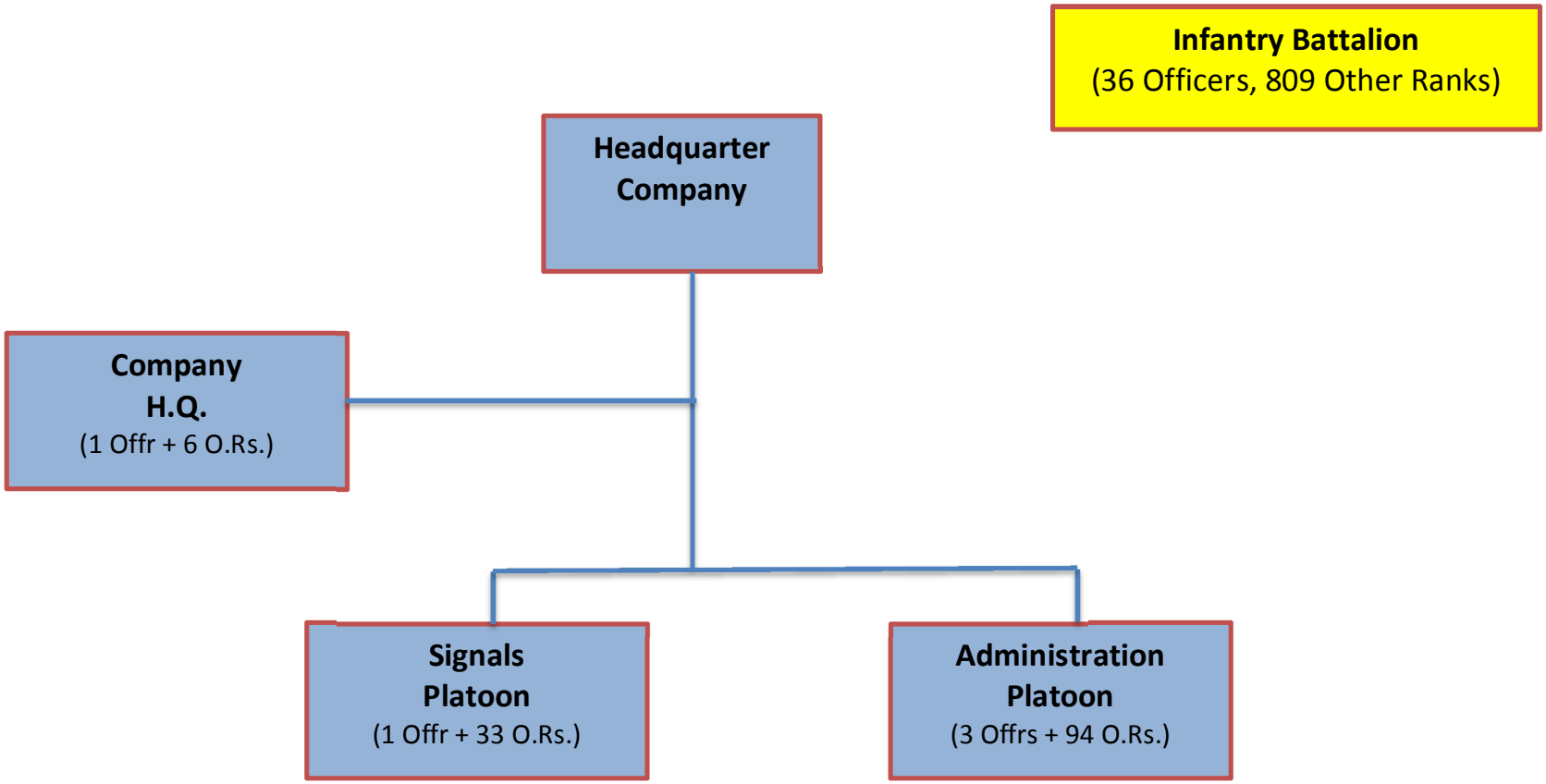
Infantry Battalion
(36 Officers, 809 Other Ranks)
Headquarter Company
Company H.Q.
(1 Offr + 6 O.Rs.)
Signals Platoon
(1 Offr + 33 O.Rs.)
Administration Platoon
(3 Offrs + 94 O.Rs.)

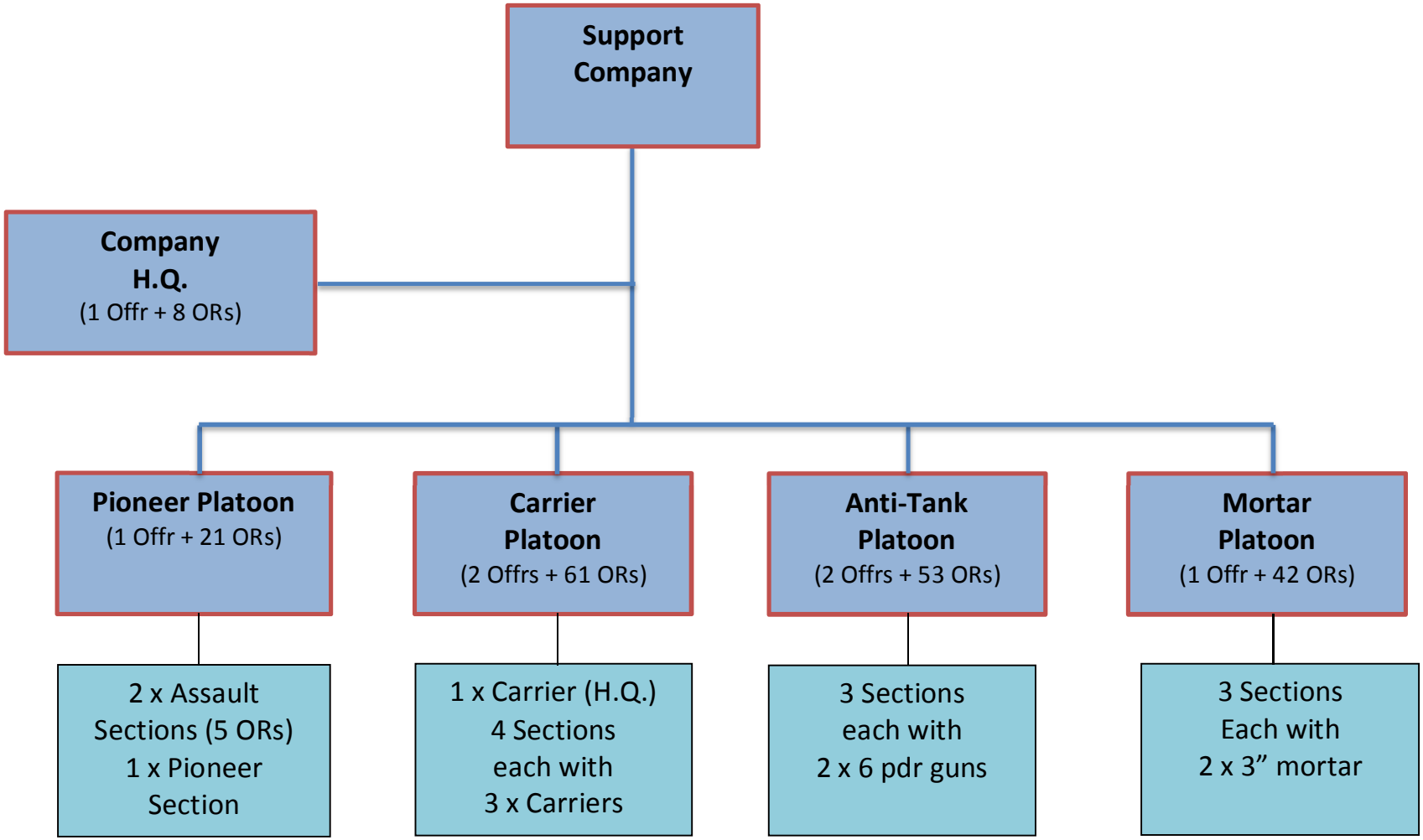
Support Company
Company H.Q.
(1 Offr + 8 ORs)
Pioneer Platoon
(1 Offr + 21 ORs)
Carrier Platoon
(2 Offrs + 61 ORs)
Anti-Tank Platoon
(2 Offrs + 53 ORs)
Mortar Platoon
(1 Offr + 42 ORs)
2 x Assault Sections (5 ORs) 1 x Pioneer Section
1 x Carrier (H.Q.) 4 Sections each with 3 x Carriers
3 Sections each with 2 x 6 pdr guns
3 Sections Each with 2 x 3" mortar